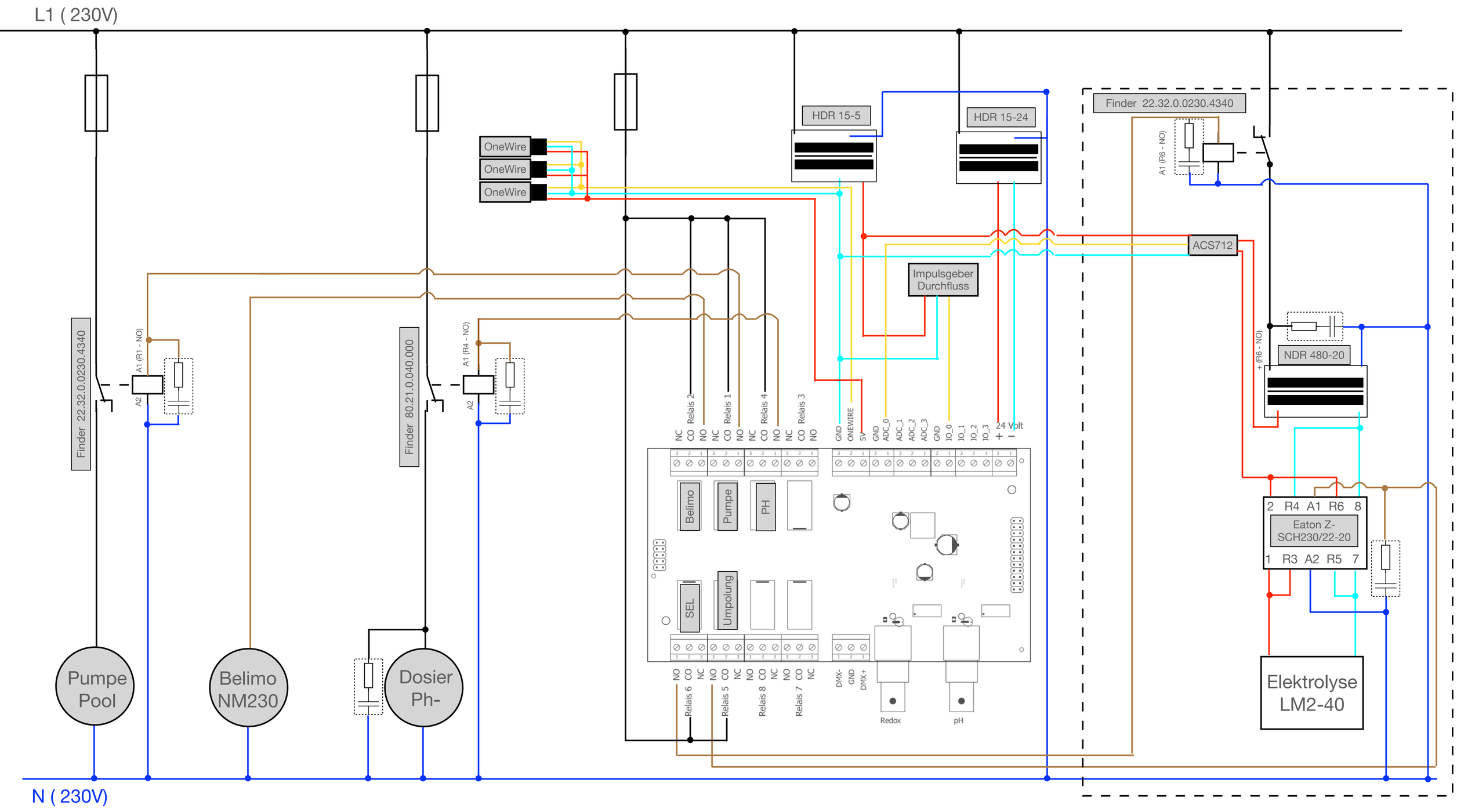
L1 (230V)
N (230V)
Finder 22.32.0.0230.4340
A1 (R1 - NO)
A2
Finder 80.21.0.040.000
A1 (R4 - NO)
A2
OneWire
OneWire
OneWire
HDR 15-5
HDR 15-24
Finder 22.32.0.0230.4340
A1 (R6 - NO)
ACS712
Impulsgeber Durchfluss
NDR 480-20
+ (R6 - NO)
Pumpe Pool
Belimo NM230
Dosier Ph-
NC CO NO Relais 2
NC CO NO Relais 1
NC CO NO Relais 4
NC CO NO Relais 3
GND ONEWIRE 5V GND ADC_0 ADC_1 ADC_2 ADC_3 GND IO_0 IO_1 IO_2 IO_3 24 Volt + −
Belimo
Pumpe
PH
SEL
Umpolung
NO CO NC Relais 6
NO CO NC Relais 5
NO CO NC Relais 8
NO CO NC Relais 7
DMX- GND DMX+
Redox
pH
2 R4 A1 R6 8
Eaton Z-SCH230/22-20
1 R3 A2 R5 7
Elektrolyse LM2-40